Managing Patient-Specific Mechanical Ventilation: Clinical Utilisation of Respiratory Elastance (CURE) – Model and Software Development

Daniel P. Redmond[1], Shaun M. Davidson[1], Hamish A. Laing[1], Richard H. White[1], Faizi Radzi[1], Yeong Shiong Chiew[1], Sarah F. Poole[1], Nor Salwa Damanhuri[1], Thomas Desaive[2], Geoffrey M. Shaw[3], J. Geoffrey Chase[1]

[1]Department of Mechanical Engineering, University of Canterbury, Christchurch, New Zealand
[2]GIGA Cardiovascular Science, University of Liege, Liege, Belgium
[3] Intensive Care Unit, Christchurch Hospital, Christchurch, New Zealand

Canterbury District Health Board
Te Poari Hauora ō Waitaha

UCBIOENGINEERING

UC UNIVERSITY OF CANTERBURY
Te Whare Wānanga o Waitaha
CHRISTCHURCH NEW ZEALAND

Mechanical Ventilation in the ICU

- Mechanical ventilation is used as a supportive therapy in the intensive care unit for the critically ill.
- Mechanical Ventilation is very common in intensive care units
- Maintains blood oxygenation and supports respiratory function while allowing recovery
- Patient condition is highly variable, and patient-specific mechanical ventilation settings should be used

Positive End-Expiratory Pressure (PEEP)

- PEEP is the pressure at the end of a breath
- PEEP is an important setting used in mechanical ventilation
- PEEP is used to recruit collapsed lung and maintain oxygenation
- Too much PEEP overstretches and further injures lung tissue
- Too little PEEP means inadequate gas exchange or cyclic recruitment.

PEEP selection needs to be optimized for each patient

So we use respiratory mechanics

- Using respiratory mechanics to guide PEEP selection has been suggested as a way to provide patient specific optimal ventilation
- This has been validated in retrospective analysis
- To implement this at the bedside, a means of monitoring respiratory mechanics in real-time is required

Monitoring Respiratory Mechanics

- We want to know elastance and resistance
- At present some commercial ventilators make an attempt estimating these parameters

But these estimations are limited

  - Only work in volume control modes
  - Use a 2 point estimate
  - Require inspiratory pauses each breath

What we need

- A system that can non-invasively and accurately monitor respiratory mechanics in real-time
- This enables clinical trials of mechanical ventilation guided by respiratory mechanics

So we develop CURE Soft

- Clinical Utilisation of Respiratory Elastance Software
- CURE Soft will monitor respiratory mechanics
- This data is not currently available

Data acquisition

CURE Software

Pressure and Flow data

50 Hz sampling rate
R-232 to USB

Mechanical Ventilator

Patient

Data Processing

Measured airway pressure and flow data must be processed to split the data into sections for each inspiration

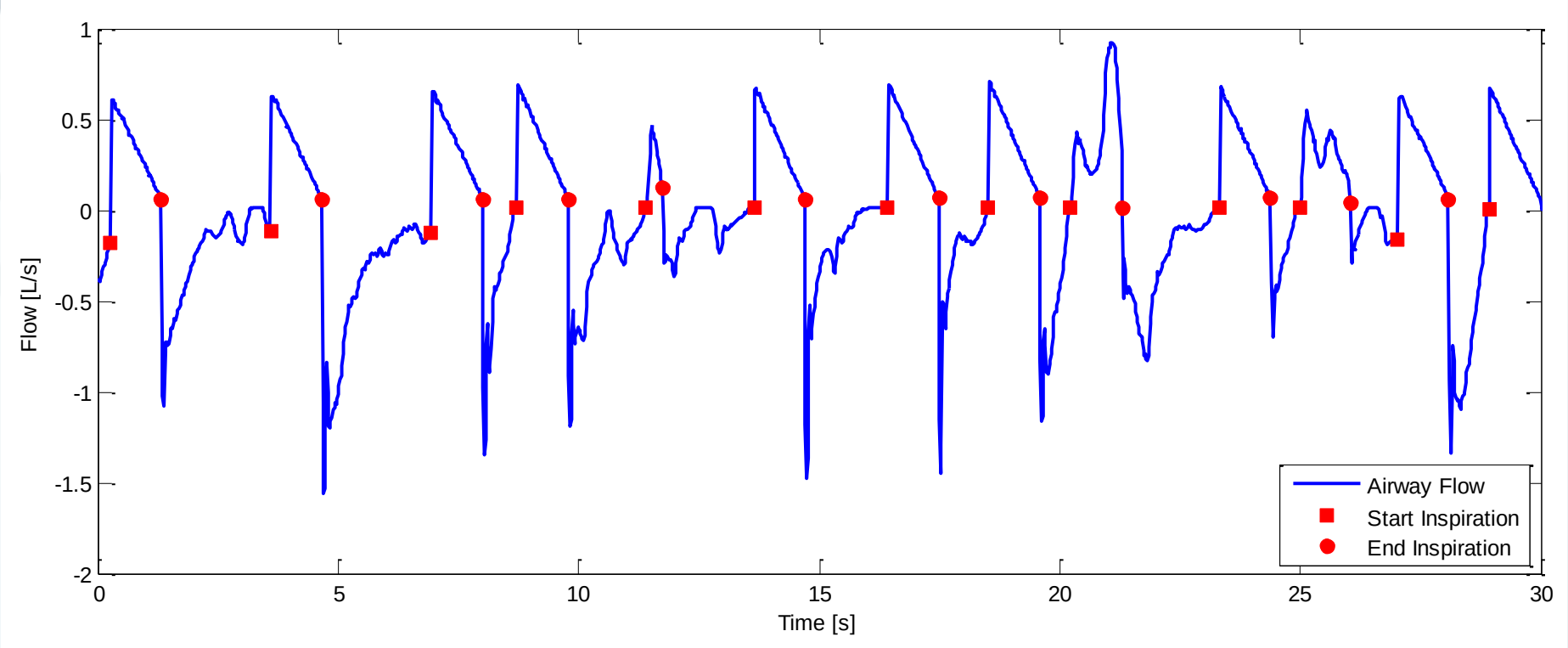

Single Compartment Lung Model

- Pressure and flow during inspiration are used to solve the model
- Volume (V) is calculated as the integral of flow (Q)
- $P_{aw}(t) = E_{rs}\, V(t) + R_{rs}\, Q(t) + PEEP$
- Linear regression is used to solve for respiratory system elastance (E_{rs}) and resistance (R_{rs})

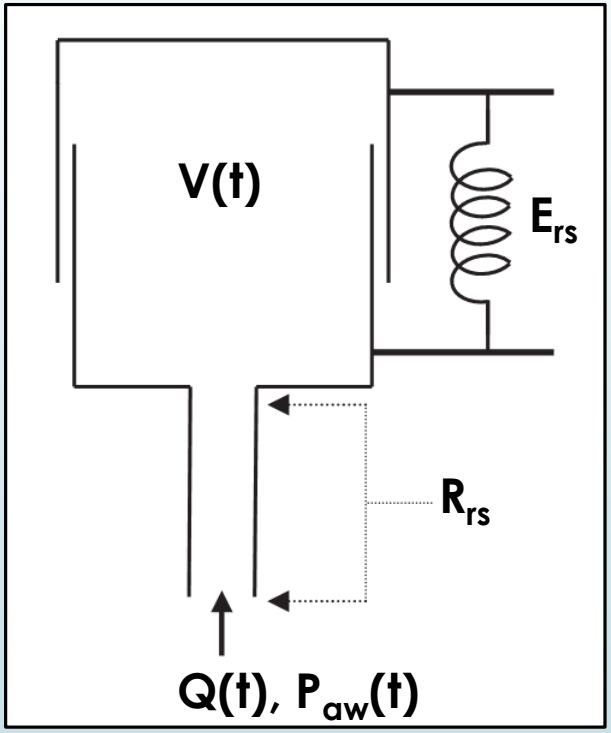

User Interface

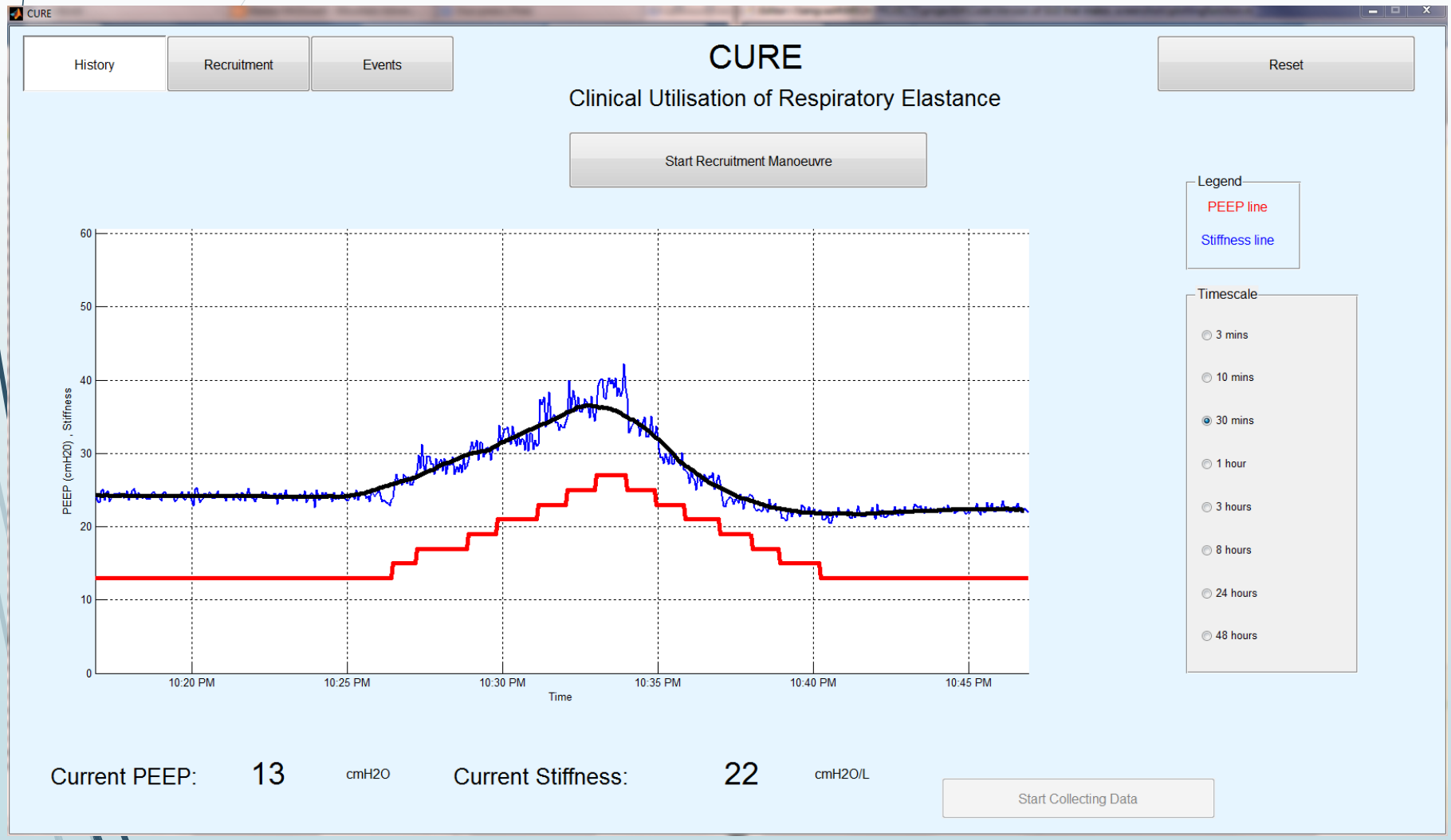

History Tab

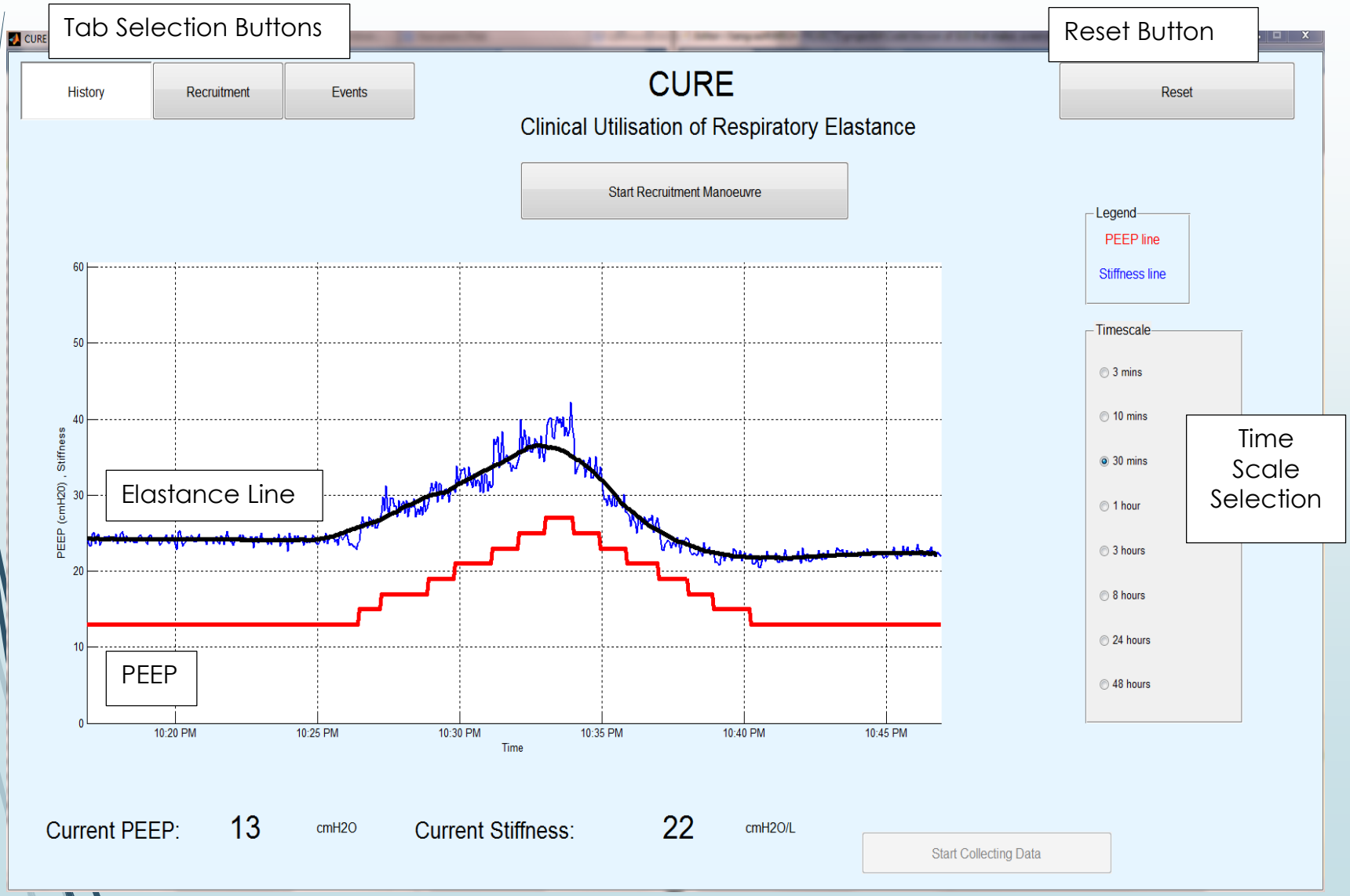
Tab Selection Buttons
Reset Button
History
Recruitment
Events
CURE
Clinical Utilisation of Respiratory Elastance
Reset
Start Recruitment Manoeuvre
Legend
PEEP line
Stiffness line
Timescale
3 mins
10 mins
30 mins
1 hour
3 hours
8 hours
24 hours
48 hours
Time Scale Selection
Elastance Line
PEEP
PEEP (cmH2O) , Stiffness
60
50
40
30
20
10
0
10:20 PM
10:25 PM
10:30 PM
10:35 PM
10:40 PM
10:45 PM
Time
Current PEEP:
13
cmH2O
Current Stiffness:
22
cmH2O/L
Start Collecting Data

Recruitment Manoeuvre Tab

Shows how elastance changes with PEEP during a recruitment manoeuvre

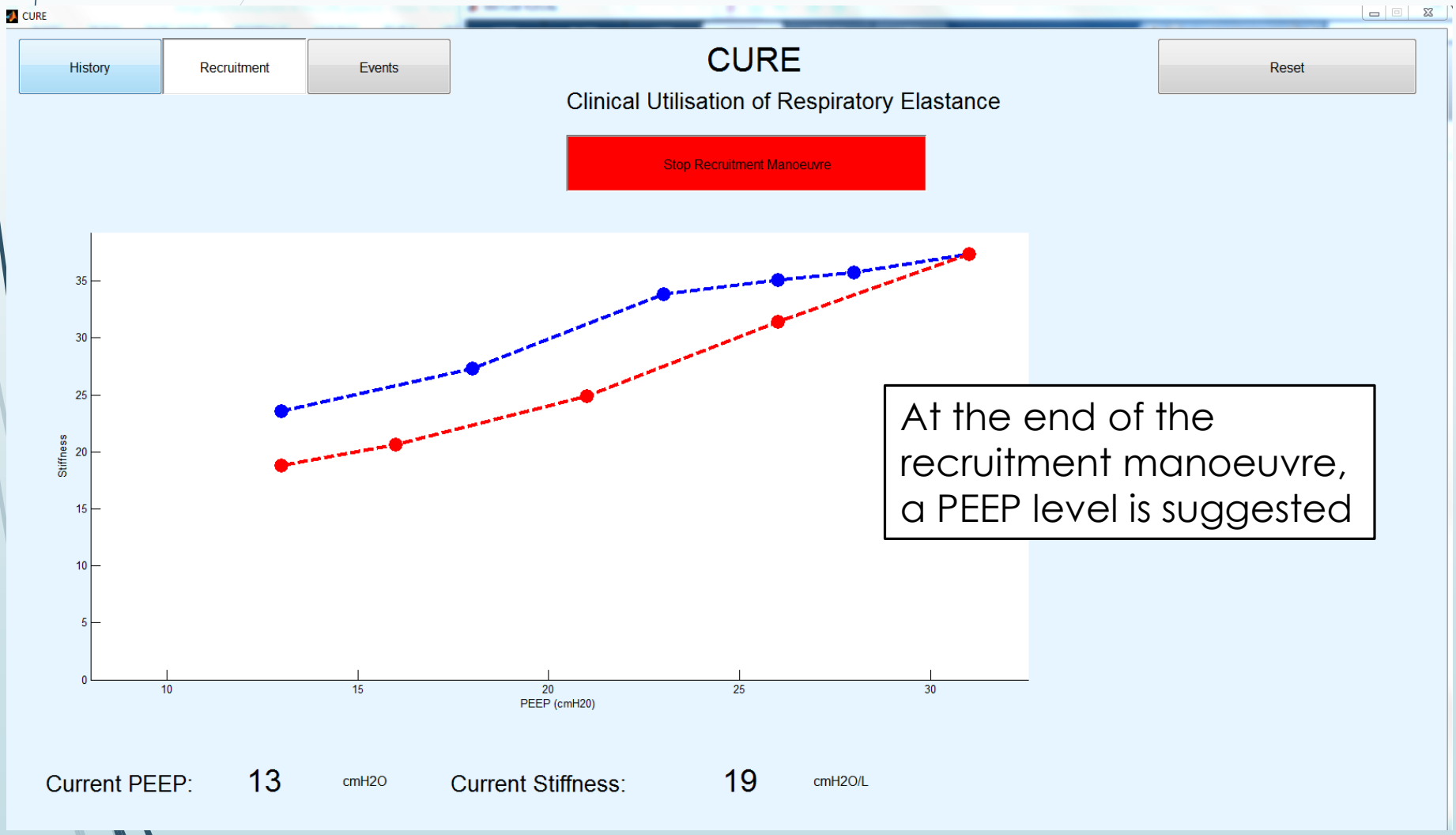

At the end of the recruitment manoeuvre, a PEEP level is suggested

Limitations

- Highly variable elastance and resistance calculations during spontaneous breathing.
- Developed and validated only on Puritan Bennet PB-840 ventilator at present
- This was the first development prototype and was developed in Matlab
- It is sometimes unstable

What next?

- A new version of CURE Soft has been built using Java
- The new version has more functionality and stability with an improved user interface
- Developed in a more systematic manner to allow easy addition of new features and changing of just the input functionality to allow compatibility with other ventilators
- A randomized control trial is expected to begin soon, using CURE Soft to evaluate the changes in patient outcomes by using model-based ventilation

Conclusion

- Developed software that tracks patient specific respiratory mechanics in real time
- Respiratory mechanics can be used to guide treatment
- CURE Soft imposes no additional patient burden, and just uses pressure and flow already measured by the ventilator

THANKS

- Supervisors – Prof Geoff Chase
  Dr Yeong Chiew
  Dr Geoff Shaw

- MV02 team – Shaun Davidson, Hamish Laing, Richard White, Faizi Radzi

Acknowledgement

This work was supported by EU FP7 IRSES (FP7-PEOPLE-2012-IRSES) program, project title: eTime - Engineering Technology-based Innovation in Medicine, Grant No. 318943.